

halliday baillie

# HB 580

## KNURLED SOLID BRONZE D STAIR RAIL BRACKET

The HB 580 Knurled Stair Rail Bracket is a new classic, milled from solid unlacquered bronze and designed to age gracefully. Each end has the additional detail of custom lathe knurling.

Brackets are designed for a 1.18-1.96" diameter rail. Please note while the HB 580 comes complete with a solid bronze rose, installation of the rose is optional depending on your aesthetic. Please see images below showing both installation options.

Projection from wall (offstand) : 3.87"
Overall height (upstand) : 2.66"

Includes all fasteners. Epoxy required for installation, not included (please contact your local H+B dealer for further information).

Material : LG2 (leaded gunmetal) Bronze
Recommended Spacing : 23-32"

Available in raw bronze only. For other finish options please see the HB 595. Please contact your Halliday + Baillie representative for the matching solid bronze Glass Fixing Kits, which can be made to order.



With rose



Without rose

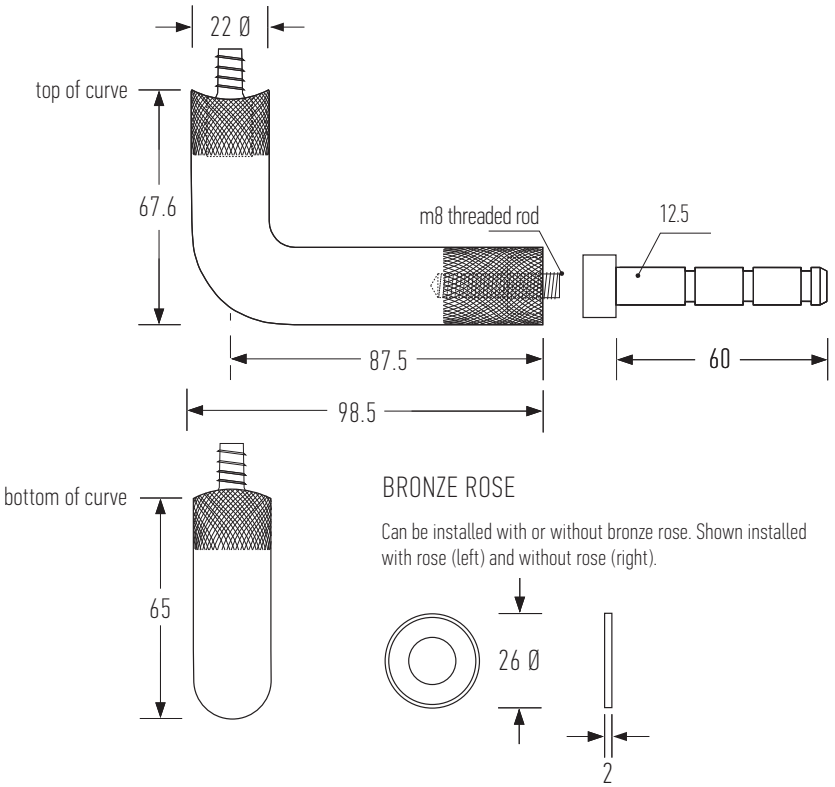


BRONZE ROSE

Can be installed with or without bronze rose. Shown installed with rose (left) and without rose (right).




Halliday + Baillie brackets are tested in accordance with both the AS/NZS 1170.1:2002 (Structural Design Actions) standards and the International Building Code, IBC (2003) to comply with the 200lb fall rating.

# HB 592

## GLASS FIXING KIT FOR HB 580/590 BRACKET

Suitable for 0.93"-0.47" glass thickness

Please check with your local Halliday + Baillie representative as not all finishes are available in all regions

Available in the following finish :
RB : Raw Bronze



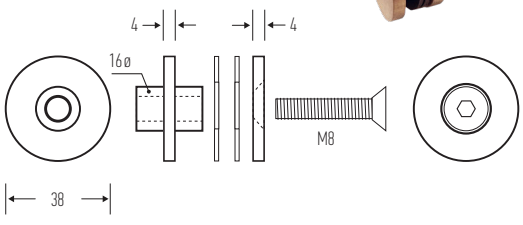


Designed and manufactured in New Zealand. For more information on this product and others please visit www.hallidaybaillie.com. For dealers in North America, contact Bridgeport Worldwide +1-800-362-1484 www.BridgeportWorldwide.com/hallidaybaillie. All information subject to change.

© 2026 v1 Halliday + Baillie Ltd.